YINGJIAO®

YSDT960 SERIES 960W



c UL US
UL61010
pending

CE
pending

UK CA
pending

YSDT series are designed with metal housing and for there phase system with wide range from 340V Ac to 550V Ac.

The series ofer built-in constant current limiting circuitl active PFc functionl current sharing up to 3840w(3+1)l and operating in wide temperature range.

They are suitable for industrial-related applications such as industrial controll semiconductor fabric.-tion equipmentl and factory automation and Elec-tro-mechanical apparatus etc.

Features

- 3-phase 340~550VAcwide Range lnput (2-phase operation possible)
- protection:short circuit/overload /over Voltage/over Temperature
- CCL Bulit-in constant current Limiting circuit
- current sharing up to 3840w (3+1)
- PFC Built-in Active pFc Function
- DC Dc oK Relay contact
- Higher Efficiency and Low power Dissipation
- 3 Three years warranty

Model Information

yingjiao Part number	DC VOLTAGE	RATED CURRENT	RATED POWER	VOLTAGE ADJ. RANGE
YSDT960-24	24V	40A	960W	24 ~ 28V
YSDT960-48	48V	20A	960W	48 ~ 55V

Input

VOLTAGE RANGE	Three-Phase 380 ~ 480VAC (Dual phase operation possible)
	480 ~ 780VDC
INPUTVOLTAGE RANGE	340 ~ 550VAC/480 ~ 780VDC
FREQUENCY RANGE	47~63Hz
POWER FACTOR (TYP.)	PF≥0.88/400VAC at full load
	PF≥0.86/500VAC at full load
EFFICIENCY (TYP.)	94% YSDT960-24
	94.5% YSDT960-48
AC CURRENT (TYP.)	2.0A/400VAC
	1.4A/500VAC
INRUSH CURRENT (TYP.)	COLD START 60A
LEAKAGE CURRENT	<3.5mA / 530VAC

Output

RIPPLE & NOISE (max.)	180mVp-p YSDT960-24
	250mVp-p YSDT960-48
VOLTAGETOLERANCE	±2.0%
LINE REGULATION	±0.5%
LOAD REGULATION	±1.0%
SETUP, RISETIME	1200msl 60ms/400VAC at full load
	800msl 60ms/500VAC at full load
HOLD UPTIME (TYP.)	20ms / 400VAC at full load
	20ms / 500VAC at full load

protection

OVER LOAD	105 ~ 130% rated output power Protection tYpe: Constant current limitingI unit wiII shutdown after 3 sec.I re-power on to recover.
OVERVOLTAGE	29~33V YSDT960-24 56~65V YSDT960-48 Protection tYpe: Shutdown o/p voltageI re-power on to recover.
OVERTEMPERATURE	Shutdown o/p voltageI recovers automaticaIlY after temperature goes down.

Environment

WORKINGTEMP.	-30 ~ +70 ℃ (Refer to "Derating Curve")
WORKING HUMIDITY	20 ~ 95% RH non-condensing
STORAGETEMP., HUMIDITY	-40 ~ +85 ℃I 10 ~ 95% RH non-condensing
TEMP. COEFFICIENT	±0.03%/ ℃ (0 ~ 50 ℃)
VIBRATION	Component:10 ~ 500HZI 2G 10min./1cYcIeI 60min. each along XI YI Z axes; Mounting: Compliance to lEC60068-2-6
MTBF	550.04K hrs min.TeIcordiaSR-332(BeIIcore)

SAFETY & EMC

SAFETY STANDARDS	UL61010-1I UL61010-2-201I BS EN/EN62368-1
WITHSTANDVOLTAGE	I/P-O/P: 3KVAC I/P-FG: 2KVAC O/P-FG: 0.5KVAC O/P-DC OK: 0.5KVAC
ISOLATION RESISTANCE	I/P-O/PI I/P-FGIO/P-FG:>100M Ohms / 500VDC / 25℃/ 70% RH
EMC EMISSION	BS EN/EN55032(ClSPR32)
EMC IMMUNITY	BS EN/EN61000-4-2I 3I 4I 5I 6I 8I11

Note

1.AII parameters NOT specialIY mentioned are measured at 400VAC inputI ratedload and 25℃ of ambient temperature.

2.Ripple&noise are measured from peak to peak with bandwidth Iimit of 20MHz(0.1uF and 47uF/50V paralIeI capacitor under DC output fulIloadIAC nominaI input 25℃ ambient temperature).

3.lnstaIlation clearances: top with 40mmI bottom with 20mmIIeft and right with 5mm. lncrease the space to 10-15mm when the adjacent device is heat source.

4.The ambient temperature derating of 3.5 ℃/1000m for operating altitude higher than 2000m(6500ft).

5.DuaI phase operation is aIIowed under certain derating to output Ioad. Please refer to derating curves for details.

Dimensions &weight

width:	110mm / 4.33in
Height:	125.2mm / 4.93in
Depth:	152.3mm / 6.00in
weight:	2.47kg

packing

carton size:	49 X 34.5 X 16.5 CM 19.3 X 13.6 X 6.5 in
Master carton Quantities:	6pcs / Carton

MechanicalSpecificatiOn

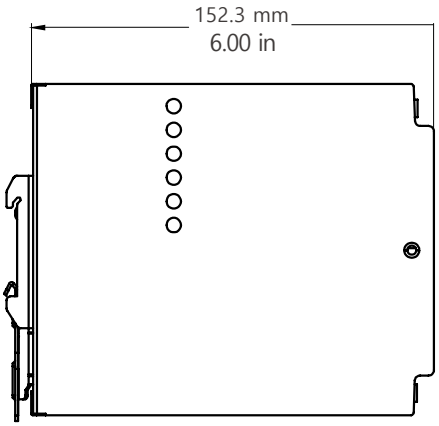

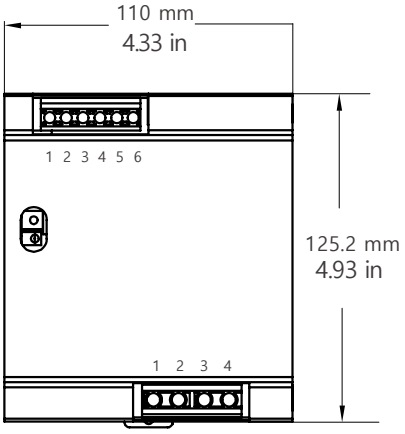

Output

No.	Description
1, 2, 3	DC OUTPUT +V
4,5,6	DC OUTPUT -V

Input

No.	Description
1	FG ⏚
2	AC/L3
3	AC/L2
4	AC/L1

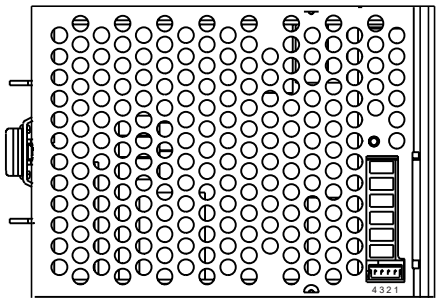

No.	Description
1	P-(Current Share)
2	P+(Current Share)
3,4	DC OK Relay Contact

BlOcK Diagram

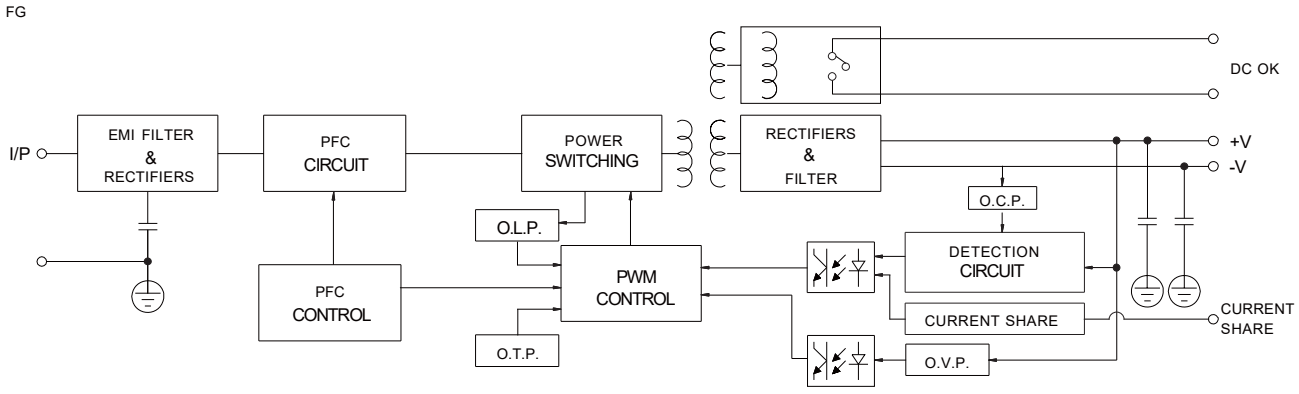

Deduction curve and Temperature

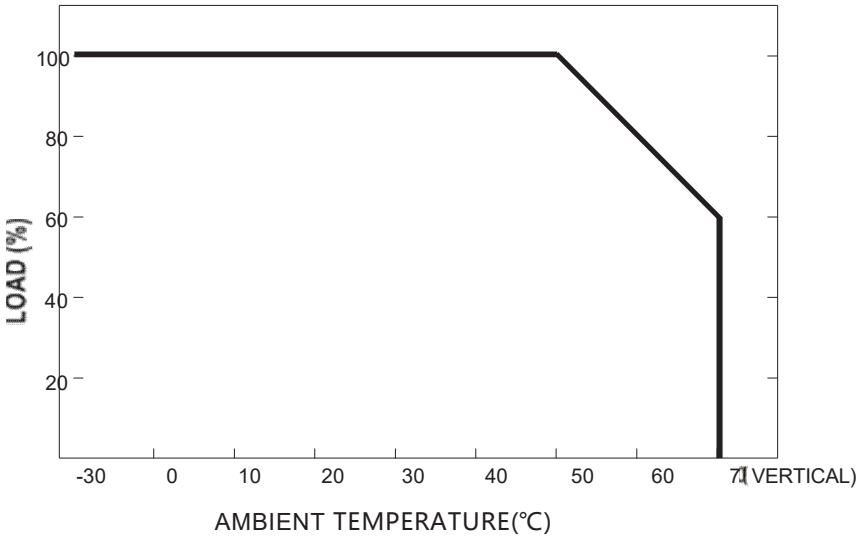

Minus output and Input voltage curves

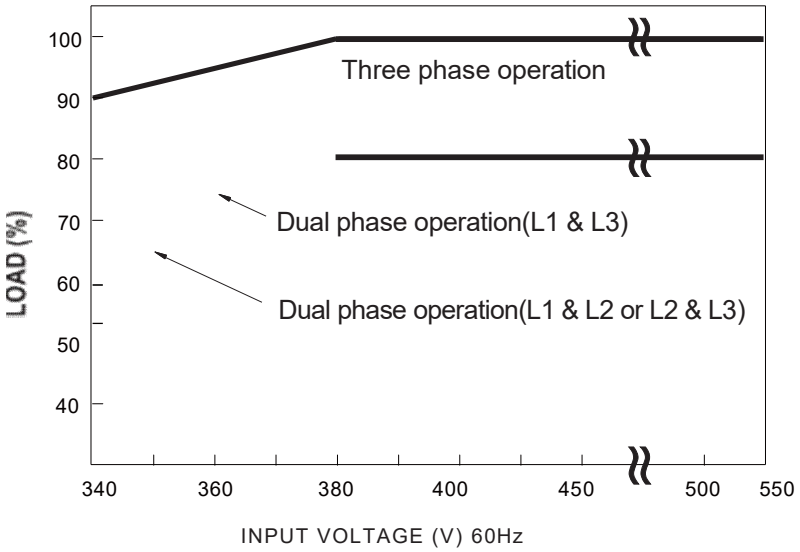

DC OK Relay Contact

Contact Close	PSU turns on / DC OK.
Contact Open	PSU turns of / DC Fail.
Contact Ratings (max.)	30V/1A resistive load.

Note

current sharing

1. connection type of parallel operation is as follows (P+IP- parallel connection)
2. The output Voltagediference between the parallel units should be less than 0.2v
3. The total output current must not eXceed the Value calculated of the following equation

   (output current at parallel operation)=(The rated current per unit)* (Number of unit) X 0.9
4. The maXimum quantity of parallel operation is four unitsIlf need more quantity of parallel operationlplease

   contact the manufacture.
5. In parallel connectionl the minimum output load should be more than 3% of total output load

   (Min. load > 5% rated current per unit X number of unit).
6. The power supplies should be paralleled using short and large diameter wiring and then connected to the load.
7. In parallel connectionl maybe only one unit(master) operate if total output LEDs & relayswill not turn on.
8. some minor noise may be heard at lightload condition under parallel operation.

   This is a normal phenomenon and the performance of the Psu will not be inluenced.

